senseca

AEOLUS-3
WUS30F... series

THE NEW 3-AXIAL ULTRASONIC ANEMOMETER



INTRODUCTION

Introducing **AEOLUS**, our ultimate solution for precise wind monitoring in any environment!
This cutting-edge 3-axis ultrasonic static anemometer goes beyond the basics, delivering comprehensive data to elevate your wind measurement experience.
Specifically suitable for applications such:

- Wind farm monitoring
- Automatic Weather Stations (AWS)
- Buildings, constructions and bridges control
- Ports, airports and heliports
- Road and railway tunnels

FEATURES

Accurate measurements in any conditions

AEOLUS doesn't just measure wind speed and direction; it provides U-V-W Cartesian components and Wind Gust values. With integrated heating, it prevents snow and ice accumulation, ensuring precise measurements in all environmental conditions.

Built to last in aggressive atmospheres

Crafted with AISI 316 housing, AEOLUS stands up to even the most aggressive atmospheres, making it perfect for marine environments.
No need to worry about corrosion or wear – it's built to endure.

Low maintenance, high performance

With no moving parts, AEOLUS minimizes maintenance hassles. All sensors come factory-calibrated, eliminating the need for additional user interventions. It's the hassle-free solution for your wind monitoring needs.

CONFIGURATION & MEASUREMENT

Versatile output options

Choose from a range of isolated outputs – RS232, RS485, RS422 with NMEA, Modbus-RTU, and ASCII proprietary protocols, or go for the SDI-12 isolated output.
3 analog outputs cater to your specific needs, whether it's wind speed and direction or U-V-W Cartesian components.
Supplied with PC software, for configuration and displaying of the real time measurements.

Continuous monitoring and alignment

Featuring a barometric pressure sensor and tilt/roll sensor, AEOLUS monitors misalignments with the vertical axis, ensuring continuous accuracy. It adapts to the changing conditions to provide reliable data.

Ideal for electrically noisy environments

AEOLUS boasts high immunity to electromagnetic disturbances, making it the go-to choice for measurements in electrically noisy environments like industrial settings and wind farms.

Upgrade your wind monitoring experience with AEOLUS – where precision meets durability. Invest in the future of accurate environmental data.

ROBUST HOUSING FOR HARSH ENVIRONMENTS
The AISI 316 housing provides durability and protection, making it suitable for measurements in the toughest conditions

GREAT FLEXIBILITY
Benefit from three analog outputs, as well as RS232, RS485, RS422 and SDI-12 isolated serial outputs, allowing seamless integration with various systems

MAINTENANCE FREE TECHNOLOGY
Experience hassle-free operation with our ultrasound technology, eliminating the need for regular maintenance

ACCORDING TO THE STANDARD
• MIL-STD-810G Method 509.6 and EN ISO 9227:2017 (salt fog anti-corrosion test)
• MIL-STD-810F Method 521.2 (anti-icing/freezing rain test)
• EN 60068-2-6:2008 / IEC 60068-2-6:2007 (vibration resistance test)

TES Thomson Environmental Systems
thomsongroup.com.au

Measurement specifications

Wind speed	Sensor	Ultrasounds
	Measuring range	0...85 m/s
	Resolution	0.01 m/s
	Accuracy	± 0.2 m/s or ± 2% of measure, the greatest (0...65 m/s) ± 3% of measure (> 65 m/s)
Wind direction	Sensor	Ultrasounds
	Measuring range	0...360° (Azimuth) ± 60° (Elevation)
	Resolution	0.1°
	Accuracy	± 2° RMSE (2 m/s < wind speed < 65 m/s) ± 3° RMSE (wind speed > 65 m/s)
Sonic temperature	Sensor	Calculated quantity
	Measuring range	-40…+60 °C
	Resolution	0.1 °C
	Accuracy	± 1 °C
Barometric pressure	Sensor	Piezoresistive
	Measuring range	300…1100 hPa
	Resolution	0.1 hPa
	Accuracy	± 0.5 hPa (700…1100 hPa) @ 20 °C ±1 hPa (500…1100 hPa) / ±1.5 hPa (300…500 hPa) @ T=0…60 °C
Tilt angles	Resolution	0.05°
	Accuracy	± 1°

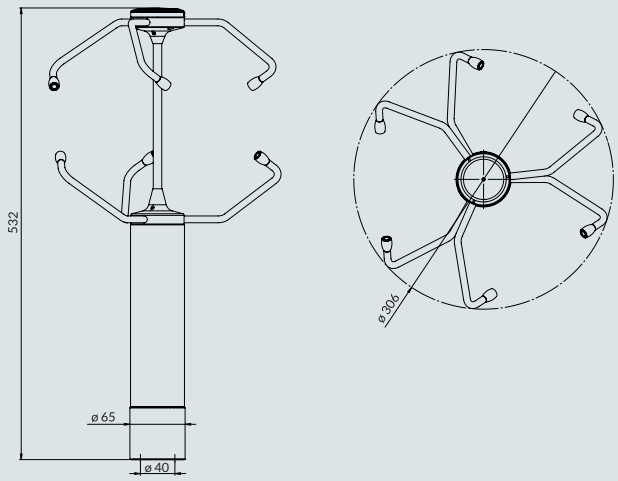

General specifications

Instrument power supply	12...30 Vdc (15...30 Vdc for 0...10 V output) / < 8 W
Heating power supply	24 Vdc ± 10% / 105 W
Serial outputs	Isolated RS232, RS485, RS422 and SDI-12
Communication protocols	NMEA, MODBUS-RTU, SDI-12, ASCII proprietary
Analog outputs	3 isolated analog outputs, for wind speed and direction or for speed U-V-W cartesian components. Output type: 0/4...20 mA, 0...1 V, 0...5 V or 0...10 V depending on model. Load: max. 500 Ω for current output, min 10 kΩ for voltage output. Analog outputs updating rate 4 Hz.
Measurement interval	From 1 to 4 Hz (measurements/s)
Wind speed averaging interval	Configurable from 1 s to 10 min
Wind Gust calculation interval	Configurable from 1 s to 10 min
Electrical connection	19-pole M23 male connector
Operating temperature	-40…+70 °C
Protection degree	IP 67 (EN 60529)
Anti-corrosion test	MIL-STD-810G Method 509.6 (48 hours of exposure + 48 hours of drying) EN ISO 9227:2017
Anti-icing/ freezing rain test	MIL-STD-810F Method 521.2
Vibration resistance test	EN 60068-2-6:2008 IEC 60068-2-6:2007
Survival speed	100 m/s
Weight	2.6 kg approx.
Housing	AISI 316
Installation	on mast Ø 40 mm external and Ø 36 mm internal

Ordering codes

WUS30F

Analog output
- A = 0/4…20 mA (0…20 or 4…20 mA is user configurable)
- W = 0…1 V
- X = 0…5 V
- Y = 0…10 V

Thomson Environmental Systems
thomsongroup.com.au

V 1.2

Senseca Italy Srl
Via G. Marconi, 5 - Selvazzano Dentro (PD) - Italy
www.senseca.com - info@senseca.com